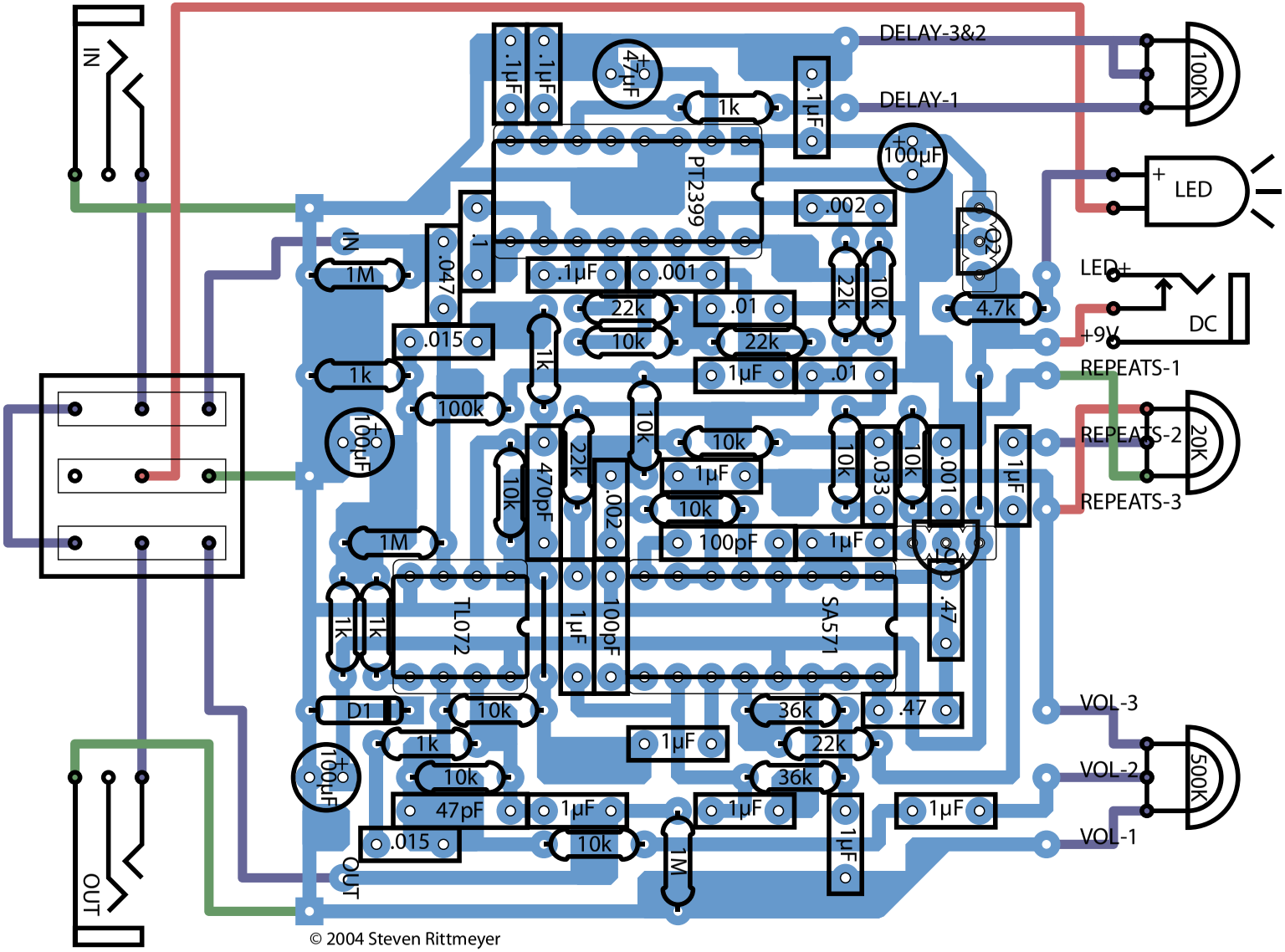
IN
OUT
DELAY-3&2
DELAY-1
100K
LED
LED+
DC
+9V
REPEATS-1
REPEATS-2
REPEATS-3
20K
VOL-3
VOL-2
VOL-1
500K
PT2399
TL072
SA571
D1
Q2
Q1
.1µF
47µF
1k
100µF
.002
.001
.01
22k
10k
4.7k
1µF
1M
.047
.015
100k
470pF
.033
100pF
.47
36k
47pF
© 2004 Steven Rittmeyer